EVERLIGHT

DATASHEET

SMD ▪ A
91-21SYGC/S530-XX/XXX

Features

. Package in 12mm tape on 7″ diameter reel.
. Compatible with automatic placement equipment.
.EIA Std. package.
.Mono-color type.
.Pb-free.
.The product itself will remain within RoHS compliant version.
. Compliance with EU REACH.
.Compliance Halogen Free .(Br <900 ppm ,Cl <900 ppm , Br+Cl < 1500 ppm)

Description

.The 91-21 SMD LED is much smaller than leaded components .
Thus enable smaller board size. Higher packing density. Reduced storage space and finally smaller equipment to be obtained.
. Besides, light weight makes them ideal for miniature applications.
. Furthermore by automation assembly machines the accuracy is anticipated.

Applications

.Small indicator for indoor applications.
.Flat backlight for LCD, switches and symbols.
.Indicator and backlight in office equipment.
.Indicator and backlight for battery driven equipment.
.Indicator and backlight for audio and video equipment.
.Backlighting in dashboards and switches.
.Telecommunication：indicator and backlighting in telephone and fax.

Device Selection Guide

Chip Materials	Emitted Color	Resin Color
AlGaInP	Brilliant Yellow Green	Water Clear

Absolute Maximum Ratings (Ta=25℃)

Parameter	Symbol	Rating	Unit
Reverse Voltage	V_R	5	V
Forward Current	I_F	20	mA
Peak Forward Current (Duty 1/10 @1KHz)	I_{FP}	60	mA
Power Dissipation	Pd	60	mW
Operating Temperature	T_{opr}	-40 ~ +85	℃
Storage Temperature	Tstg	-40 ~ +100	℃
Electrostatic Discharge	ESD	2000	V
Soldering Temperature	T_{sol}	Reflow Soldering : 260 ℃ for 10 sec. Hand Soldering : 350 ℃ for 3 sec.	

Electro-Optical Characteristics (Ta=25℃)

Parameter	Symbol	Rank	Min.	Typ.	Max.	Unit	Condition
Luminous Intensity	Iv	E1	132	198	-----	mcd	I_F=20mA
		E2	264	330			
		E3	400	630			
		E4	555	630			
Viewing Angle	$2\theta_{1/2}$		-----	25	-----	deg	I_F=20mA
Peak Wavelength	λp		-----	575	-----	nm	I_F=20mA
Dominant Wavelength	λd		-----	573	-----	nm	I_F=20mA
Spectrum Radiation Bandwidth	△λ		-----	20	-----	nm	I_F=20mA
Forward Voltage	V_F		**1.7**	2.0	2.4	V	I_F=20mA
Reverse Current	I_R		-----	-----	10	μA	V_R=5V

Note:
1.T0olerance of Luminous Intensity: ±11%
2.Tolerance of Dominant Wavelength ±1nm
3.Tolerance of Forward Voltage: ±0.1V

EVERLIGHT

Typical Electro-Optical Characteristics Curves

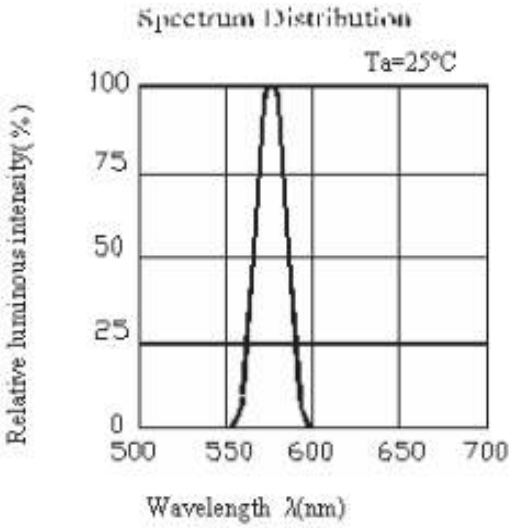

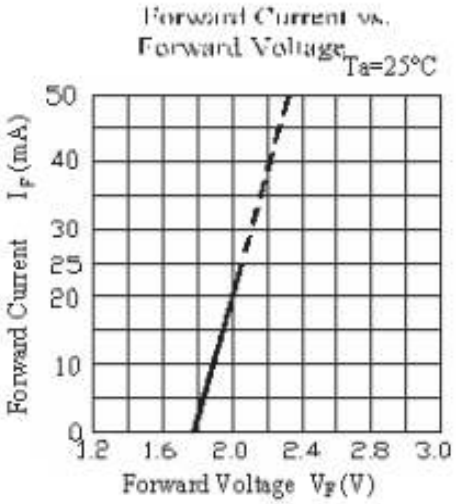

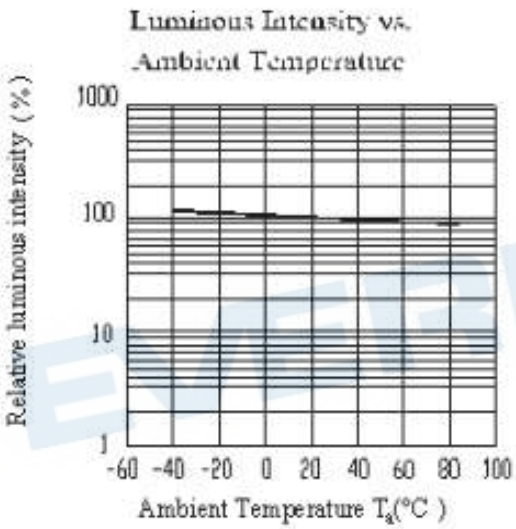

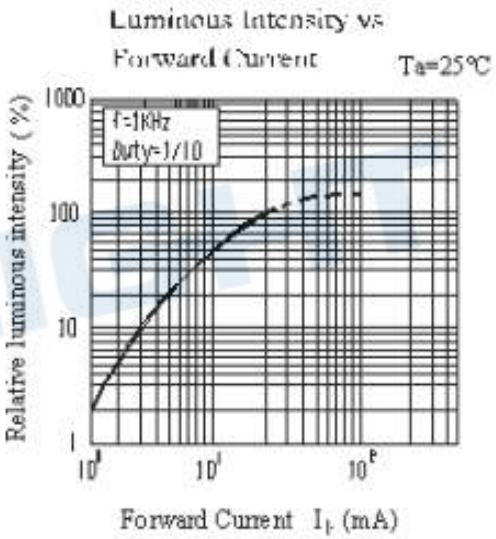

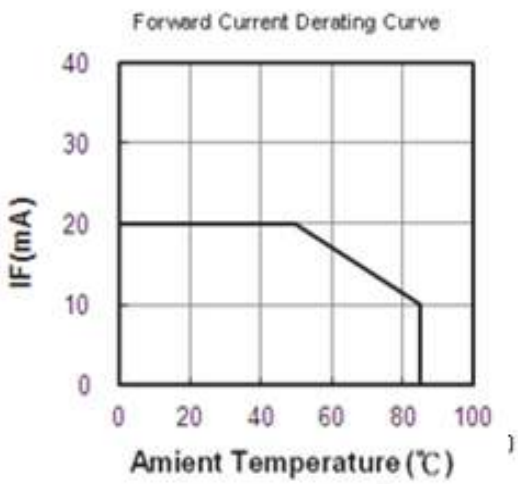

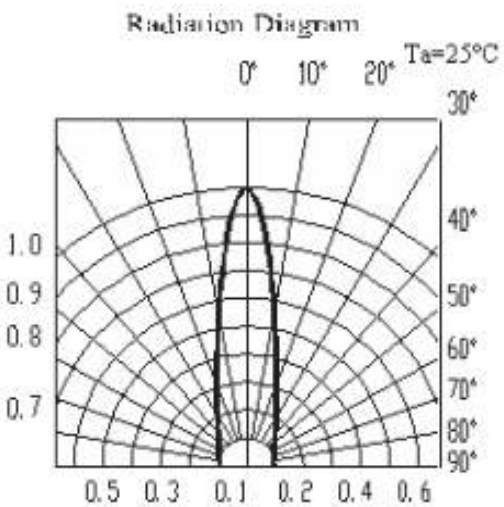

Package Outline Dimensions

91-21

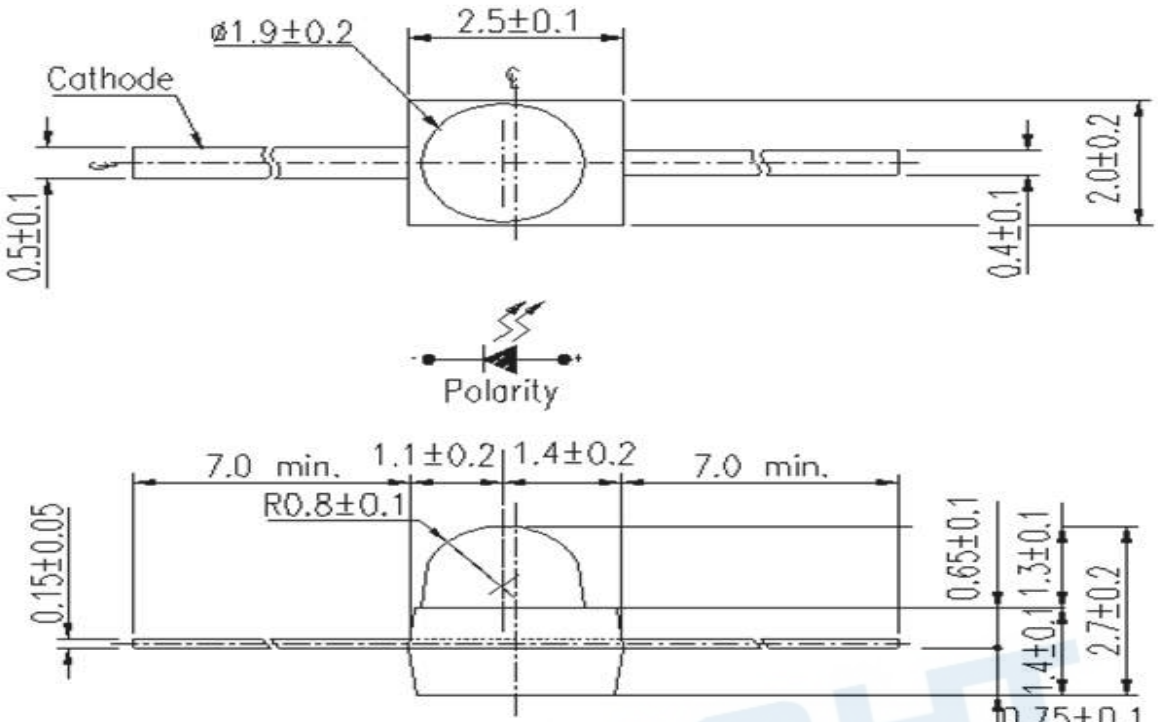

F2

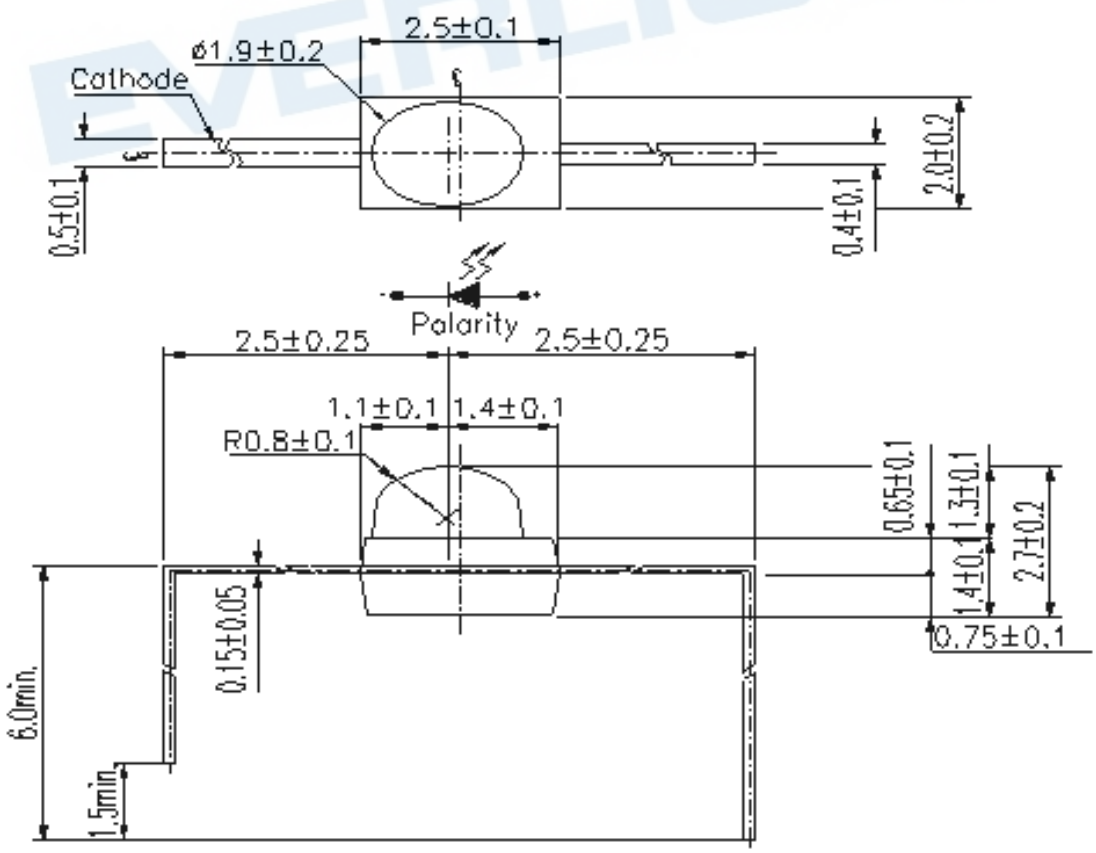

TR7

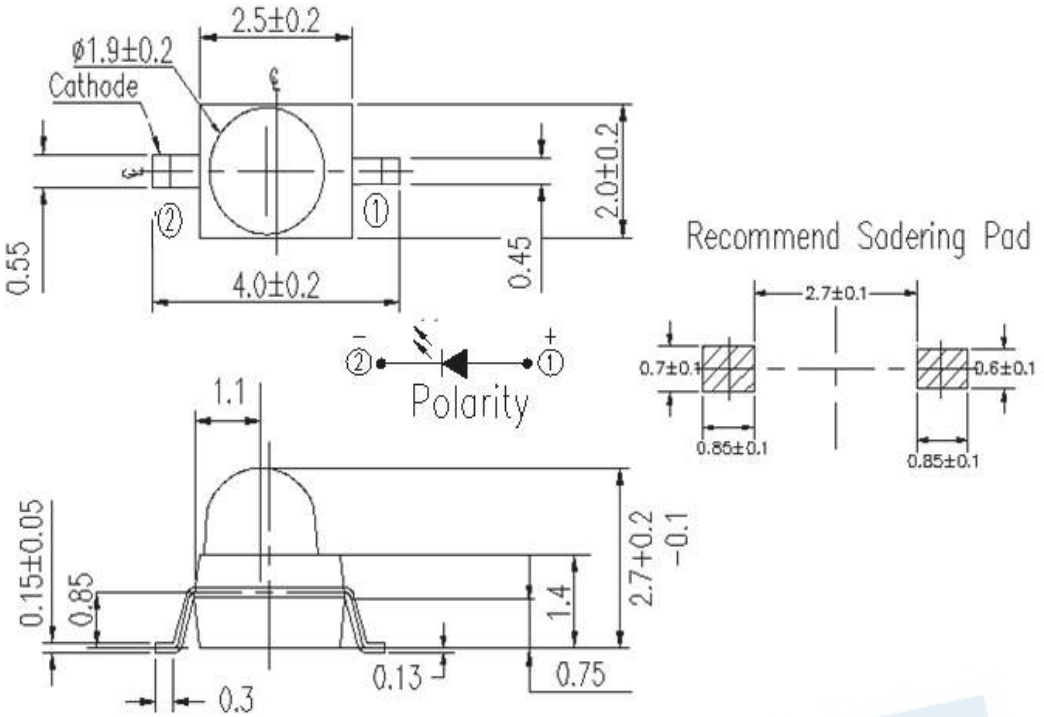
2.5±0.2
ø1.9±0.2
Cathode
2.0±0.2
0.55
0.45
4.0±0.2
Polarity
Recommend Sodering Pad
2.7±0.1
0.7±0.1
0.6±0.1
0.85±0.1
0.85±0.1
1.1
0.15±0.05
0.85
2.7+0.2
-0.1
1.4
0.13
0.75
0.3

TR9

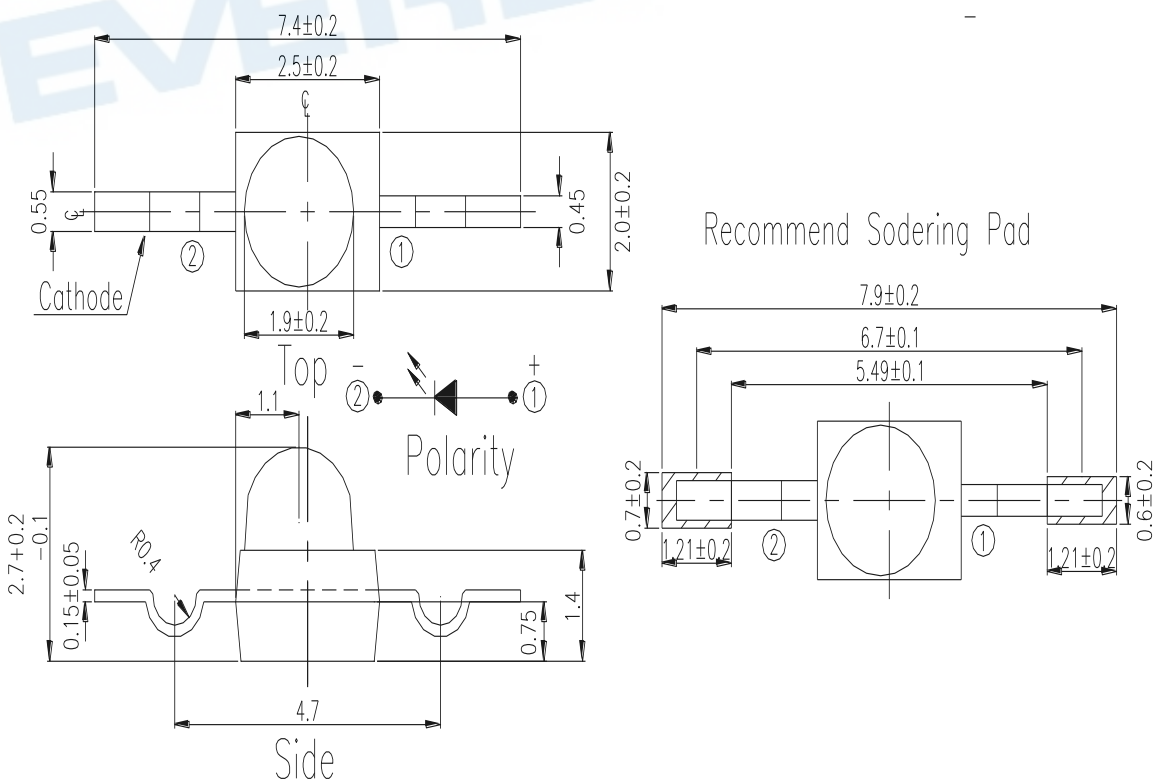
7.4±0.2
2.5±0.2
0.55
0.45
2.0±0.2
Cathode
1.9±0.2
Top
Polarity
Recommend Sodering Pad
7.9±0.2
6.7±0.1
5.49±0.1
0.7±0.2
0.6±0.2
1.21±0.2
1.21±0.2
1.1
2.7+0.2
-0.1
0.15±0.05
R0.4
0.75
1.4
4.7
Side

TR10

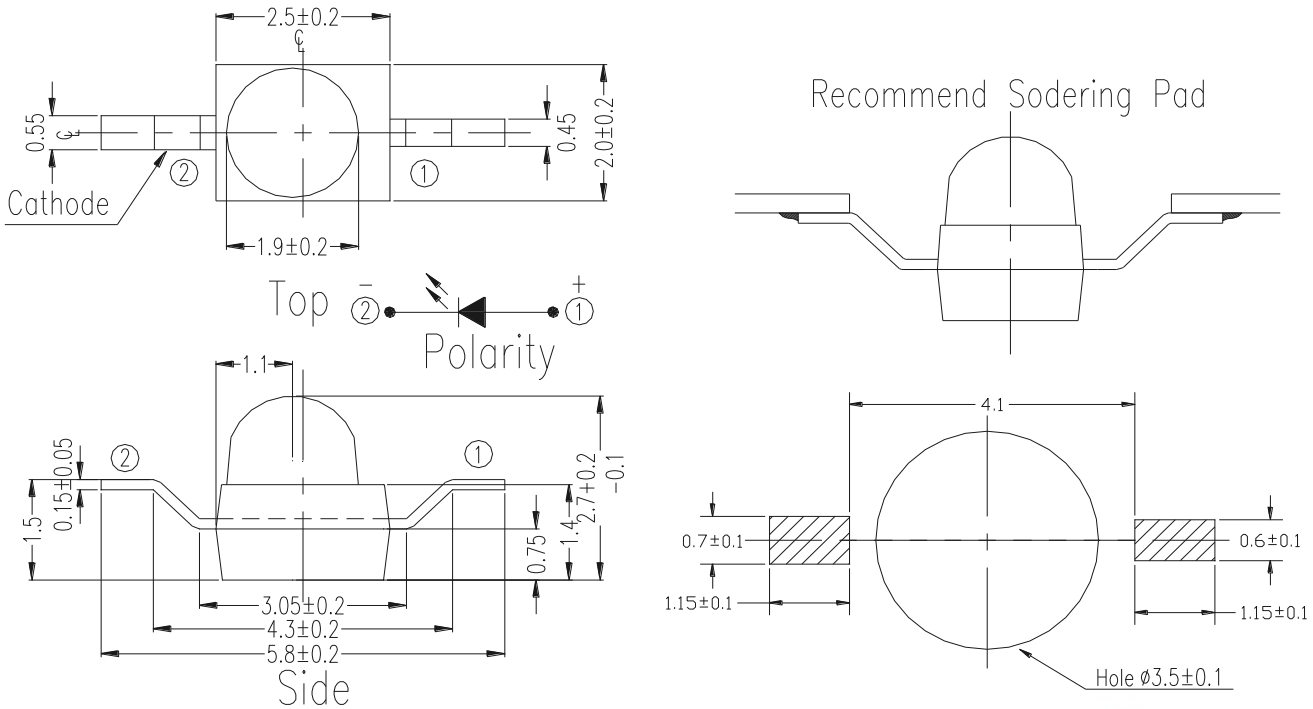

Note: The tolerances unless mentioned are ±0.1, unit=mm.

EVERLIGHT

Package Outline Dimensions

Label Explanation

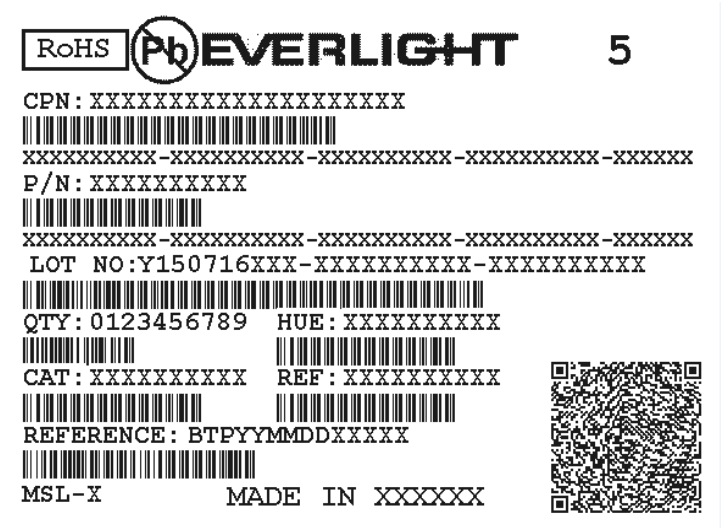

- CPN: Customer's Product Number
- P/N: Product Number
- LOT No: Lot Number
- QTY: Packing Quantity
- CAT: Luminous Intensity Rank
- HUE: Dom. Wavelength Rank
- REF: Forward Voltage Rank

Reel & Carrier Tape Dimensions

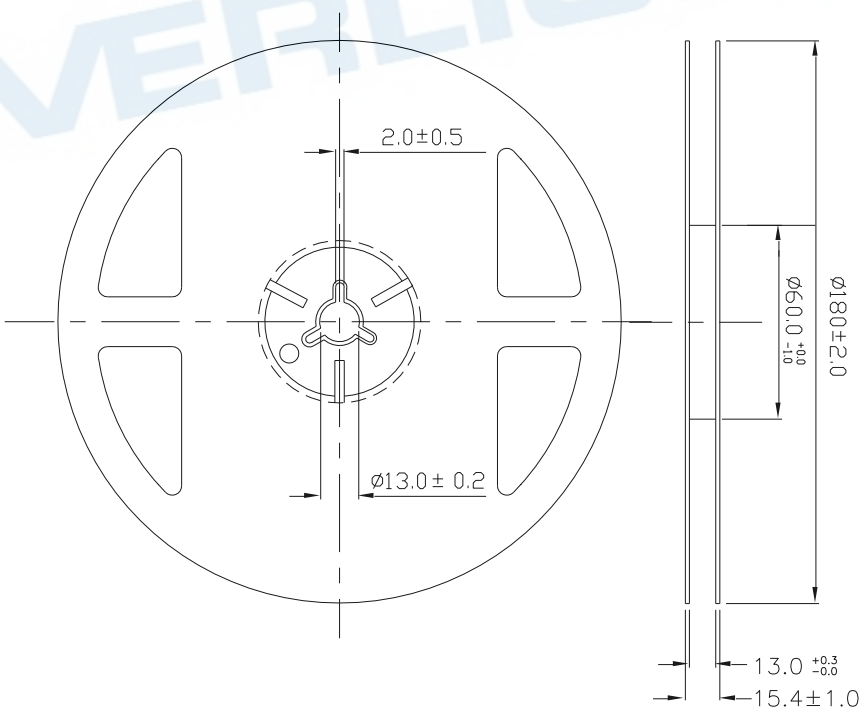

Note: The tolerances unless mentioned are ±0.1, unit=mm.

Loaded quantity is 1000 PCS/bag bulk

91-21/TR7

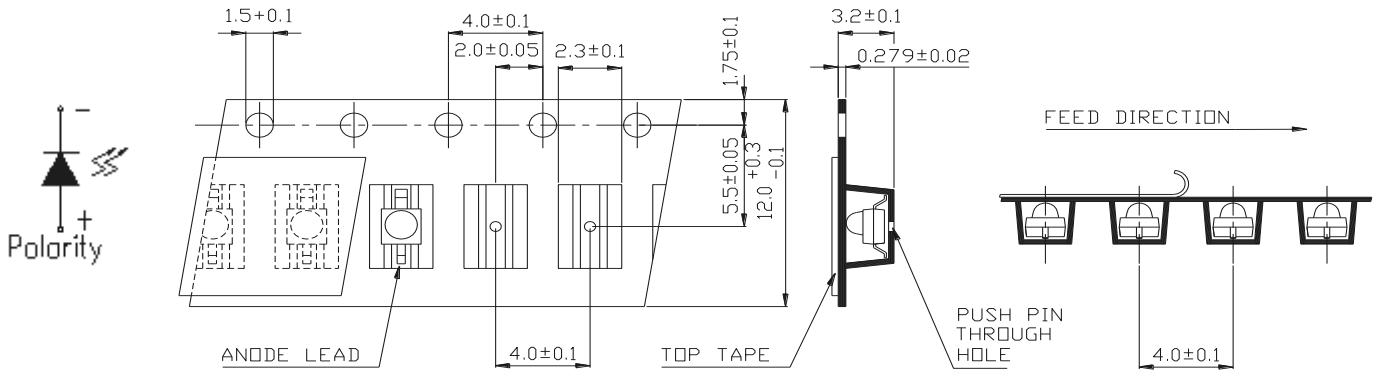

91-21/TR9

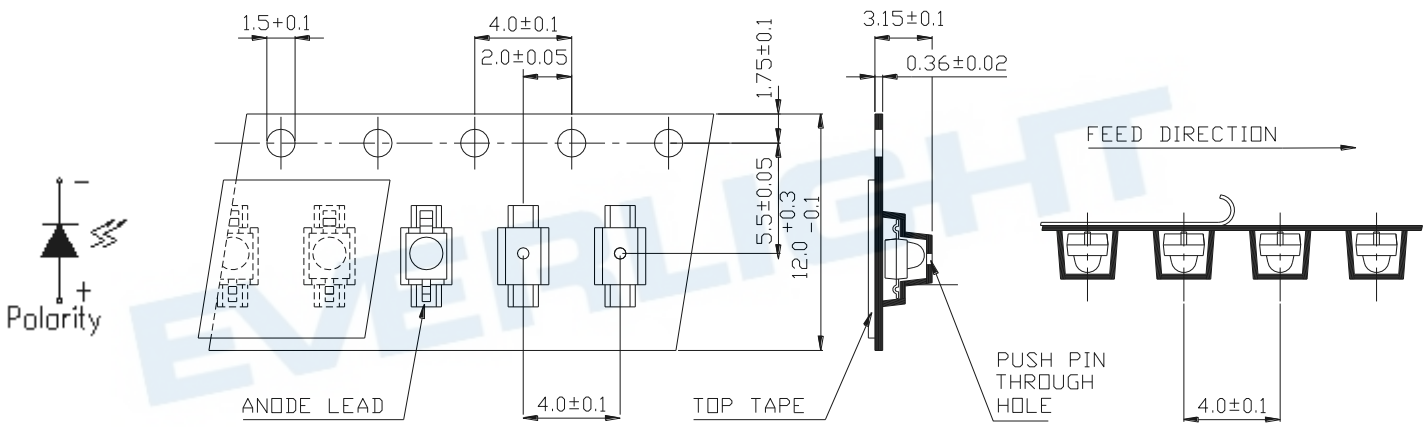

EVERLIGHT

91-21/TR10

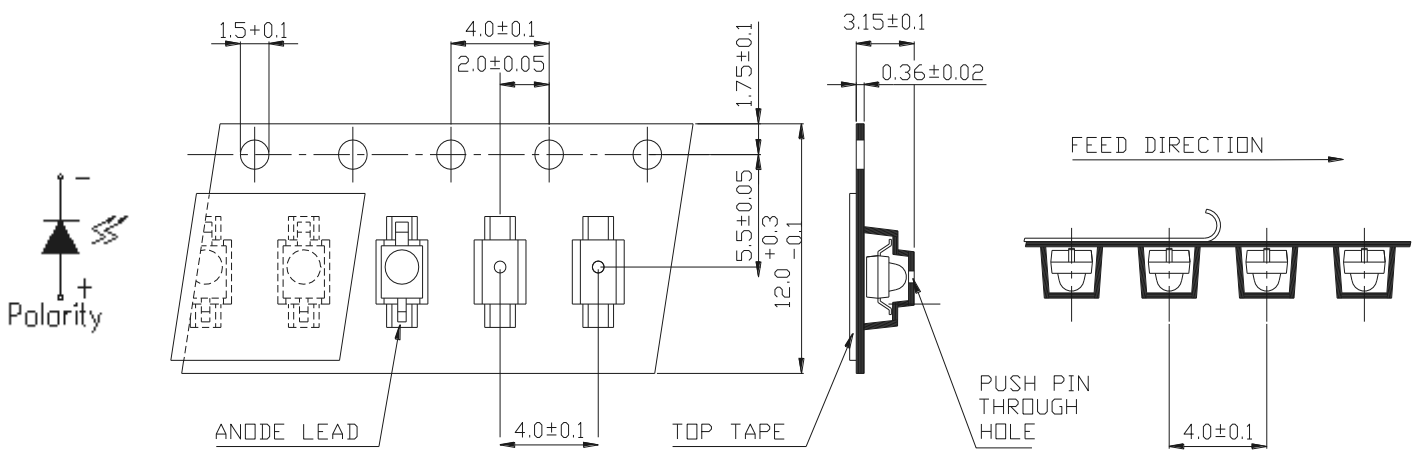

Precautions For Use

1. Over-current-proof

Customer must apply resistors for protection, otherwise slight voltage shift will cause big current change (Burn out will happen).

2. Storage

2.1 Do not open moisture proof bag before the products are ready to use.

2.2 Before opening the package: The LEDs should be kept at 30℃ or less and 90%RH or less.

2.3 After opening the package: The LED's floor life is 72 hours under 30℃ or less and 60% RH or less.

If unused LEDs remain, it should be stored in moisture proof packages.

2.4 If the moisture absorbent material (silica gel) has faded away or the LEDs have exceeded the storage time, baking treatment should be performed using the following conditions.

Baking treatment : 60±5℃ for 24 hours.

3. Soldering Condition

3.1 Pb-free solder temperature profile

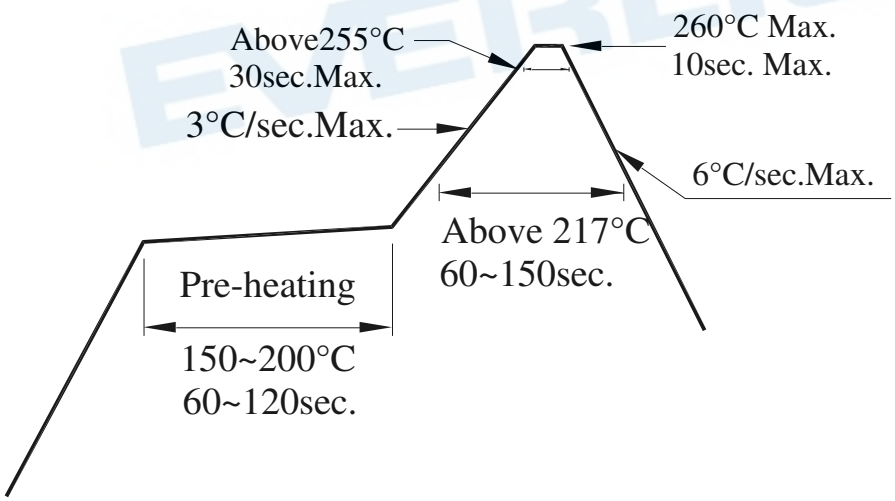

3.2 Reflow soldering should not be done more than two times.

3.3 When soldering, do not put stress on the LEDs during heating.

3.4 After soldering, do not warp the circuit board.

4.Soldering Iron

Each terminal is to go to the tip of soldering iron temperature less than 350℃ for 3 seconds within once in less than the soldering iron capacity 25W. Leave two seconds and more intervals, and do soldering of each terminal. Be careful because the damage of the product is often started at the time of the hand solder.

5.Repairing

Repair should not be done after the LEDs have been soldered. When repairing is unavoidable, a double-head soldering iron should be used (as below figure). It should be confirmed beforehand whether the characteristics of the LEDs will or will not be damaged by repairing.

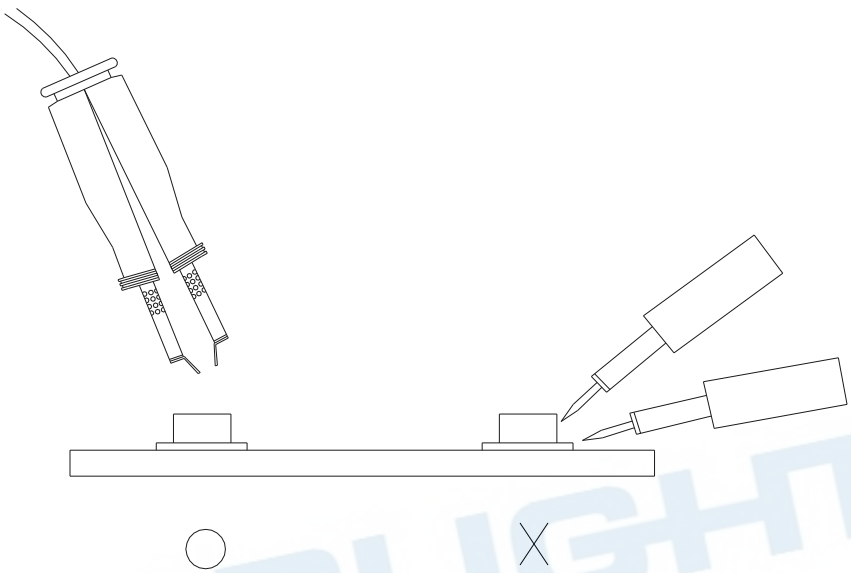

EVERLIGHT