LITEON
OPTOELECTRONICS

Through Hole Lamp Product Data Sheet

LTL-R14FEGAJHBPT

Spec No. :DS20-2021-0088
Effective Date: 03/23/2023
Revision: A

LITE-ON DCC

RELEASE

BNS-OD-FC001/A4

Through Hole Lamp

LTL-R14FEGAJHBPT

Rev	Description	By	Date
P01	Preliminary Specification (RDR-20200631-01)	Javy H.	07/17/2020
P02	Updated Packing Specification	Javy H.	01/18/2021
P03	Change pin length 3.0mm	Tina JH Chen	09/20/2021
Above data for PD and Customer tracking only			
-	New Specification, Upload in OPB2 system	Chalerm Ya.	12/24/2021
A	Update Optical Spec	Perry W./ Chalerm Y.	03/14/2023

Through Hole Lamp
LTL-R14FEGAJHBPT

1. Description

CBI (Circuit Board Indicator) is a black plastic right angle Holder (Housing) which mates with Lite-On LED lamps. Lite-On CBI is available in a wide variety of packages, including top-view (Spacer) or right angle and horizontal or vertical arrays which is stackable and easy to assembly.

1. 1. Features

- Designed for ease in circuit board assembly.
- Black case enhance contrast ratio.
- Low power consumption & High efficiency.
- Lead free product & RoHS Compliant.
- T-1 lamp: emitted colors are Yellow Green/Red bi-color & White Diffused lens.
- It is in tape and reel packing.

1.2. Applications

- Computer
- Communication
- Consumer
- Industrial

2. Outline Dimensions

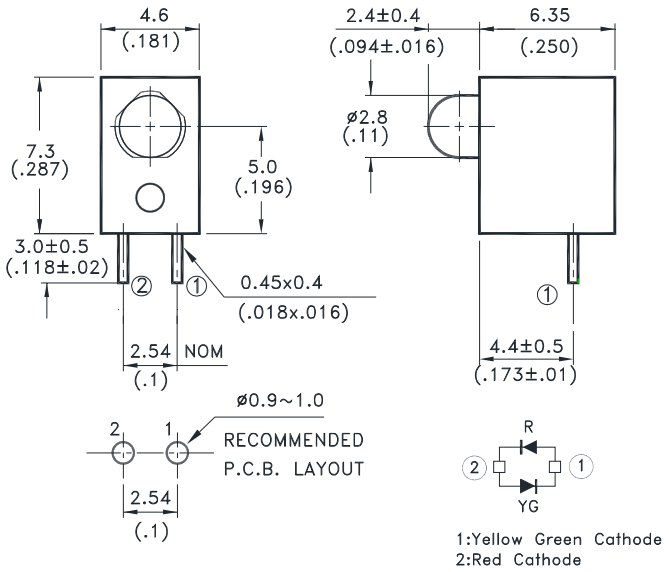

Notes :

1. All dimensions are in millimeters (inches).
2. Tolerance is ±0.25mm (.010") unless otherwise noted.
3. The Holder (Housing) material is plastic, black / dark gray color.
4. LED is Yellow green/Red bi-color & White Diffused lens.
5. Specifications are subject to change without notice.

3. Absolute Maximum Ratings at TA=25℃

Parameter	Red	Yellow Green	Unit
Power Dissipation	52	52	mW
Peak Forward Current (Duty Cycle≦1/10, Pulse Width≦10ms)	60	60	mA
DC Forward Current	20	20	mA
Operating Temperature Range	-40℃ to + 85℃		
Storage Temperature Range	-40℃ to + 100℃		
Lead Soldering Temperature [2.0mm (.079") From Body]	260℃ for 5 Seconds Max.		

4. Electrical / Optical Characteristics at TA=25℃

Parameter	Symbol	Color	Min.	Typ.	Max.	Unit	Test Condition
Luminous Intensity	IV	Yellow Green	23	38	65	mcd	IF=10mA Note 1,4
		Red	30	60	90		
Viewing Angle	2θ1/2	Yellow Green		120		deg	Note 2 (Fig.6)
		Red					
Peak Emission Wavelength	λP	Yellow Green		574		nm	Measurement @Peak (Fig.1)
		Red		660			
Dominant Wavelength	λd	Yellow Green	565	570	574	nm	IF=10mA, Note 3
		Red	630	645	660		
Spectral Line Half-Width	Δλ	Yellow Green		20		nm	
		Red		20			
Forward Voltage	VF	Yellow Green	1.6	2.0	2.5	V	IF=10mA
		Red					
Reverse Current	IR	Yellow Green			100	μA	VR=5V,(Note5, 6)
		Red					

NOTE:

1. Luminous intensity is measured with a light sensor and filter combination that approximates the CIE eye-response curve.
2. θ1/2 is the off-axis angle at which the luminous intensity is half the axial luminous intensity.
3. The dominant wavelength, λd is derived from the CIE chromaticity diagram and represents the single wavelength which defines the color of the device.
4. Iv guarantee must be included with ±30% testing tolerance.
5. Reverse current is controlled by dice source.
6. Reverse voltage (VR) condition is applied for IR test only. The device is not designed for reverse operation.

5. Typical Electrical / Optical Characteristics Curves

(25℃ Ambient Temperature Unless Otherwise Noted)

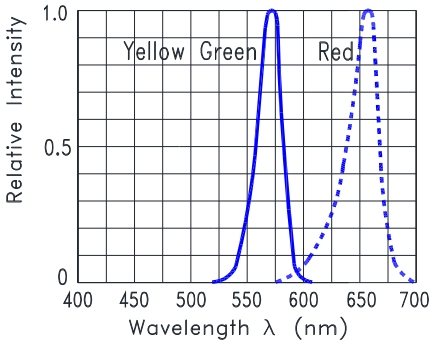

Fig.1 Relative Intensity VS. Wavelength

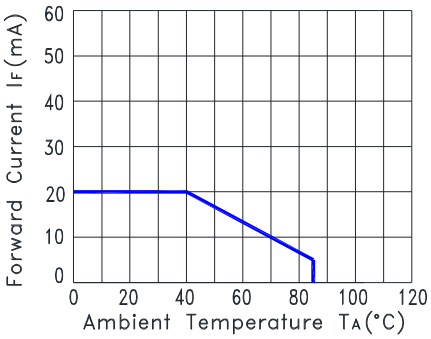

Fig.2 Forward Current Derating Curve

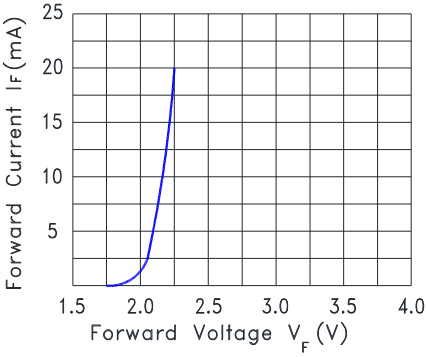

Fig.3 Forward Current vs. Forward Voltage

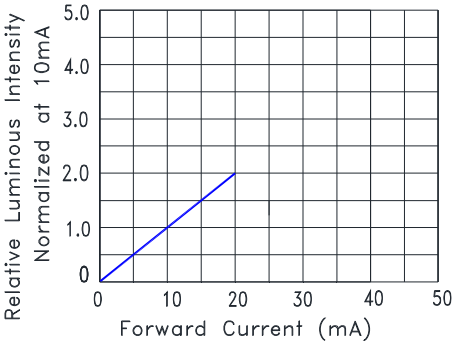

Fig.4 Relative Luminous Intensity vs. Forward Current

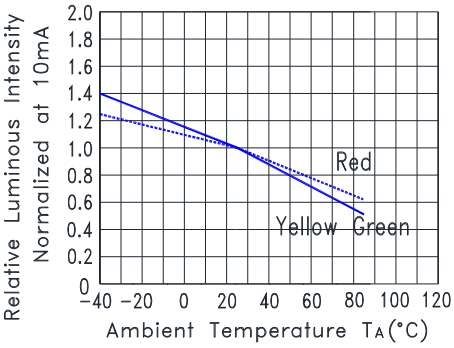

Fig.5 Relative Luminous Intensity VS. Ambient Temperature

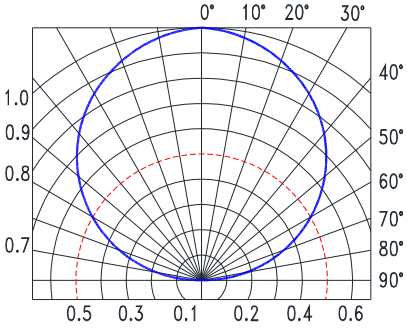

Fig.6 Spatial Distribution

6. Packing Specification

Packing Carrier Dimensions

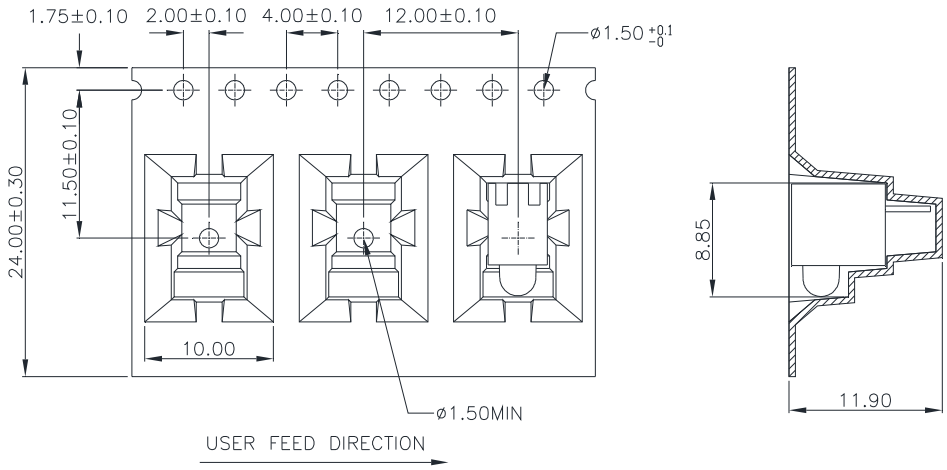

1. 10 sprocket hole pitch cumulative tolerance ±0.20
2. Material : Black Conductive Polystyrene Alloy
3. Thickness : 0.50 ±0.06 mm
4. Component load per 13" reel : 400pcs

Packing Reel Dimensions

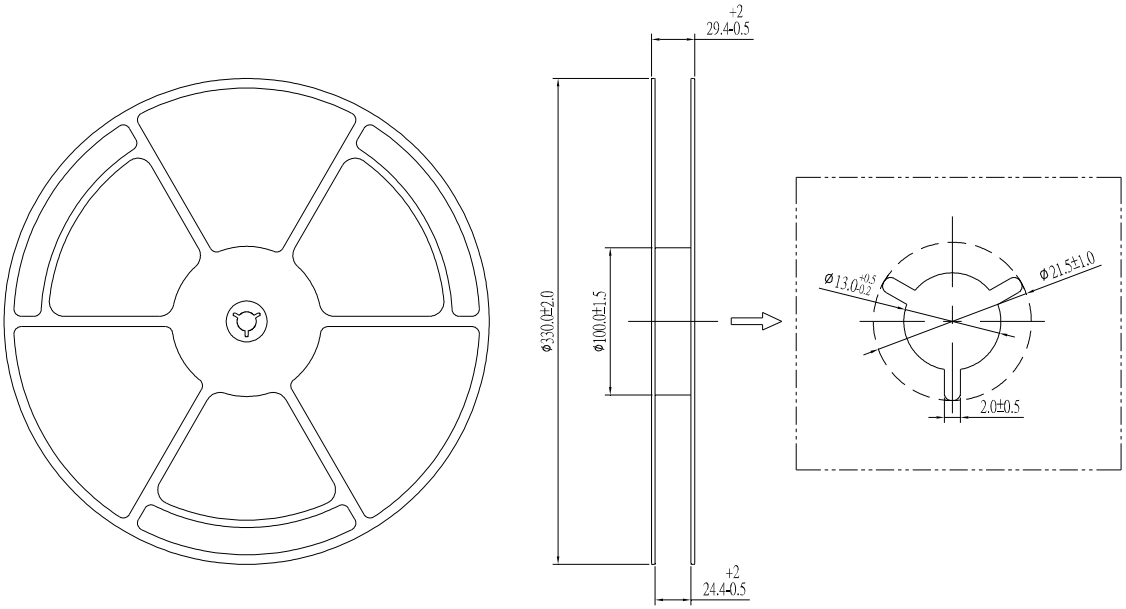

Carton Specification

1 Reel with 1 Humidity indicator card and 1 Desiccant are packed in 1 Moisture Barrier Bag (MBB)

2 Moisture Barrier Bags packed in 1 Inner Carton

Total 800pcs (400pcs * 2) per Inner Carton

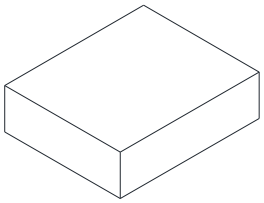

INNER CARTON
361 x 358 x 75 mm

10 Inner Cartons per Outer Carton

Total 8,000pcs (800pcs*10) per Outer Carton

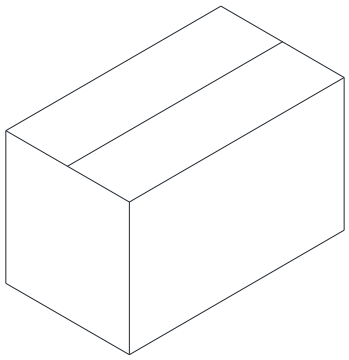

OUTER CARTON
740 x 390 x 395 mm

7. Bin Table Specification

Bin Code	Luminous Intensity (Yellow Green) Unit : mcd @10mA		Bin Code	Luminous Intensity (Red) Unit : mcd @10mA	
	Min.	Max.		Min.	Max.
G1	23	38	R1	30	50
G2	38	65	R2	50	90

Note: Tolerance of each bin limit is ±15%

Bin Code	Dominant Wavelength (Yellow Green) Unit : nm @10mA		Bin Code	Dominant Wavelength (Red) Unit : nm @10mA	
	Min.	Max.		Min.	Max.
A1	565.0	568.0	B	630.0	660.0
A2	568.0	570.0			
A3	570.0	572.0			
A4	572.0	574.0			

Note: Tolerance of each bin limit is ±1nm

8. CAUTIONS

8.1. Application

This LED lamp is good for application of indoor and outdoor sign, also ordinary electronic equipment.

8.2. Storage

The package is sealed:
The LEDs should be stored at 30℃ or less and 70%RH or less. And the LEDs are limited to use within one year, while the LEDs is packed in moisture-proof package with the desiccants inside.
The package is opened:
The storage ambient for the LEDs should not exceed 30℃ temperature and 60% relative humidity.
It is recommended that LEDs out of their original packaging are IR-reflowed within 168hrs.
For extended storage out of their original packaging, it is recommended that the LEDs be stored in a sealed container with appropriate desiccant, or in a desiccators with nitrogen ambient.
LEDs stored out of their original packaging for more than 168hrs should be baked at about 60 deg C for at least 48 hours before solder assembly.
For unused component, we strongly suggest to do baking following above condition before go SMT assembly process (IR reflow) if the MBB had been opened over 168 hours to prevent MBB from not repacking well or environment moisture over standard required condition which might cause the LEDs function fail.

8.3. Cleaning

Use alcohol-based cleaning solvents such as isopropyl alcohol to clean the LEDs if necessary.

8.4. Lead Forming & Assembly

During lead forming, the leads should be bent at a point at least 3mm from the base of LED lens. Do not use the base of the lead frame as a fulcrum during forming. Lead forming must be done before soldering, at normal temperature. During assembly on PCB, use minimum clinch force possible to avoid excessive mechanical stress.

8.5. Soldering

When soldering, leave a minimum of 2mm clearance from the base of the lens to the soldering point. Dipping the lens into the solder must be avoided. Do not apply any external stress to the lead frame during soldering while the LED is at high temperature.

Recommended soldering conditions:

Soldering iron		Wave soldering	
Temperature	350℃ Max.	Pre-heat	120℃ Max.
Soldering time	3 seconds Max. (one time only)	Pre-heat time	100 seconds Max.
		Solder wave	260℃ Max.
		Soldering time	5 seconds Max.
Position	No closer than 2mm from the base of the epoxy bulb	Dipping Position	No lower than 2mm from the base of the epoxy bulb

Note: Excessive soldering temperature and/or time might result in deformation of the LED lens or catastrophic failure of the LED. IR reflow is not suitable process for through hole type LED lamp product. Max temperature of wave soldering is not means that Holder's HDT/Melting temperature.

Reflow soldering process	
Profile Feature	Conditions
Preheat/Soak Temperature Min. (T_{smin}) Temperature Max. (T_{smax}) Time (t_s) from (T_{smin} to T_{smax})	 150℃ 200℃ 120 seconds Max.
Liquidous temperature (T_L) Time (t_L) maintained above T_L	217℃ 60~150 seconds
Peak temperature (T_P)*	255℃
Specified classification temperature (T_C)	250℃
Time (t_P) within 5℃ of the temperature T_C	30 seconds Max.
Time 25℃ to peak temperature	5 minutes Max.

Profile for Reference

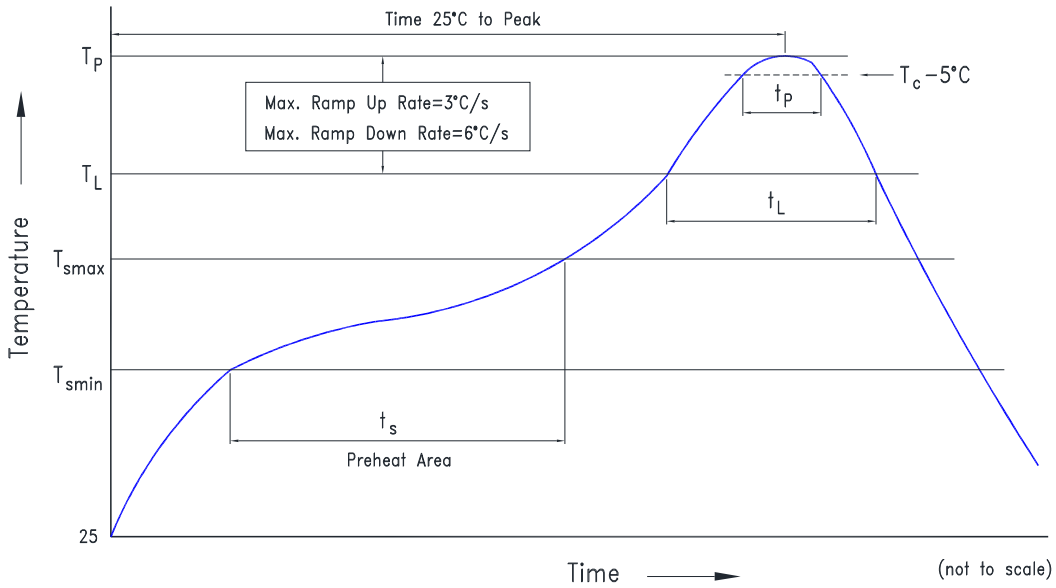

Note: Excessive soldering temperature and/or time might result in deformation of the LED lens or catastrophic failure of the LED.

The lead pitch of LED must match the pitch of the mounting holes on PCB during reflow process. Lead-forming or bending are not suggestion.

8.6. Drive Method

An LED is a current-operated device. In order to ensure intensity uniformity on multiple LEDs connected in parallel in an application, it is recommended that a current limiting resistor be incorporated in the drive circuit, in series with each LED as shown in Circuit A below.

Circuit model (A)

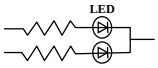

Circuit model (B)

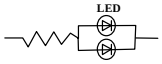

(A) Recommended circuit
(B) The brightness of each LED might appear different due to the differences in the I-V characteristics of those LEDs.

8.7. ESD (Electrostatic Discharge)

Static Electricity or power surge will damage the LED.

Suggestions to prevent ESD damage:

- Use a conductive wrist band or anti- electrostatic glove when handling these LEDs
- All devices, equipment, and machinery must be properly grounded
- Work tables, storage racks, etc. should be properly grounded
- Use ion blower to neutralize the static charge which might have built up on surface of the LEDs plastic lens as a result of friction between LEDs during storage and handing

Suggested checking list:

Training and Certification

8.7.1.1. Everyone working in a static-safe area is ESD-certified?
8.7.1.2. Training records kept and re-certification dates monitored?

Static-Safe Workstation & Work Areas

8.7.2.1. Static-safe workstation or work-areas have ESD signs?
8.7.2.2. All surfaces and objects at all static-safe workstation and within 1 ft measure less than 100V?
8.7.2.3. All ionizer activated, positioned towards the units?
8.7.2.4. Each work surface mats grounding is good?

Personnel Grounding

8.7.3.1. Every person (including visitors) handling ESD sensitive (ESDS) items wear wrist strap, heel strap or conductive shoes with conductive flooring?
8.7.3.1. If conductive footwear used, conductive flooring also present where operator stand or walk?
8.7.3.2. Garments, hairs or anything closer than 1 ft to ESD items measure less than 100V*?
8.7.3.3. Every wrist strap or heel strap/conductive shoes checked daily and result recorded for all DLs?
8.7.3.4. All wrist strap or heel strap checkers calibration up to date?
Note: *50V for Blue LED.

Device Handling

8.7.4.1. Every ESDS items identified by EIA-471 labels on item or packaging?
8.7.4.2. All ESDS items completely inside properly closed static-shielding containers when not at static-safe workstation?
8.7.4.3. No static charge generators (e.g. plastics) inside shielding containers with ESDS items?
8.7.4.4. All flexible conductive and dissipative package materials inspected before reuse or recycle?

Others

8.7.5.1. Audit result reported to entity ESD control coordinator?
8.7.5.2. Corrective action from previous audits completed?

9. Reliability Test

Classification	Test Item	Test Condition	Sample Size	Reference Standard
Endurance Test	Operation Life	Ta = Under Room Temperature IF= Per Data Sheet Maximum Rating Test Time= 1000hrs	22 PCS (CL=90%; LTPD=10%)	MIL-STD-750D:1026 (1995) MIL-STD-883G:1005 (2006)
	High Temperature High Humidity storage (THB)	Ta = 60℃ RH = 90% Test Time= 240hrs	22 PCS (CL=90%; LTPD=10%)	MIL-STD-202G:103B (2002) JEITA ED-4701:100 103 (2001)
	High Temperature Storage	Ta= 105 ± 5℃ Test Time= 1000hrs	22 PCS (CL=90%; LTPD=10%)	MIL-STD-750D:1031 (1995) MIL-STD-883G:1008 (2006) JEITA ED-4701:200 201 (2001)
	Low Temperature Storage	Ta= -55 ± 5℃ Test Time= 1000hrs	22 PCS (CL=90%; LTPD=10%)	JEITA ED-4701:200 202 (2001)
Environmental Test	Temperature Cycling	100℃ ～ 25℃ ～ -40℃ ～ 25℃ 30mins 5mins 30mins 5mins Test time: 30 Cycles	22 PCS (CL=90%; LTPD=10%)	MIL-STD-750D:1051 (1995) MIL-STD-883G:1010 (2006) JEITA ED-4701:100 105 (2001) JESD22-A104C (2005)
	Thermal Shock	100 ± 5℃ ～ -30℃ ± 5℃ 15mins 15mins Test time: 30 Cycles	22 PCS (CL=90%; LTPD=10%)	MIL-STD-750D:1056 (1995) MIL-STD-883G:1011 (2006) MIL-STD-202G:107G (2002) JESD22-A106B (2004)
	Solder Resistance	T.sol = 260 ± 5℃ Dwell Time= 10±1 seconds 3mm from the base of the epoxy bulb	11 PCS (CL=90%; LTPD=18.9%)	MIL-STD-750D:2031(1995) JEITA ED-4701: 300 302 (2001)
	Solderability	T. sol = 245 ± 5℃ Dwell Time= 5 ± 0.5 seconds (Lead Free Solder, Coverage ≧95% of the dipped surface)	11 PCS (CL=90%; LTPD=18.9%)	MIL-STD-750D:2026 (1995) MIL-STD-883G:2003 (2006) MIL-STD-202G:208H (2002) IPC/EIA J-STD-002 (2004)
	Soldering Iron	T. sol = 350 ± 5℃ Dwell Time= 3.5 ± 0.5 seconds	11 PCS (CL=90%; LTPD=18.9%)	MIL-STD-202G:208H (2002) JEITA ED-4701:300 302 (2001)

10. Others

The appearance and specifications of the product may be modified for improvement, without prior notice.